NO	DESCRIPTION	DATE	CHECK
1			

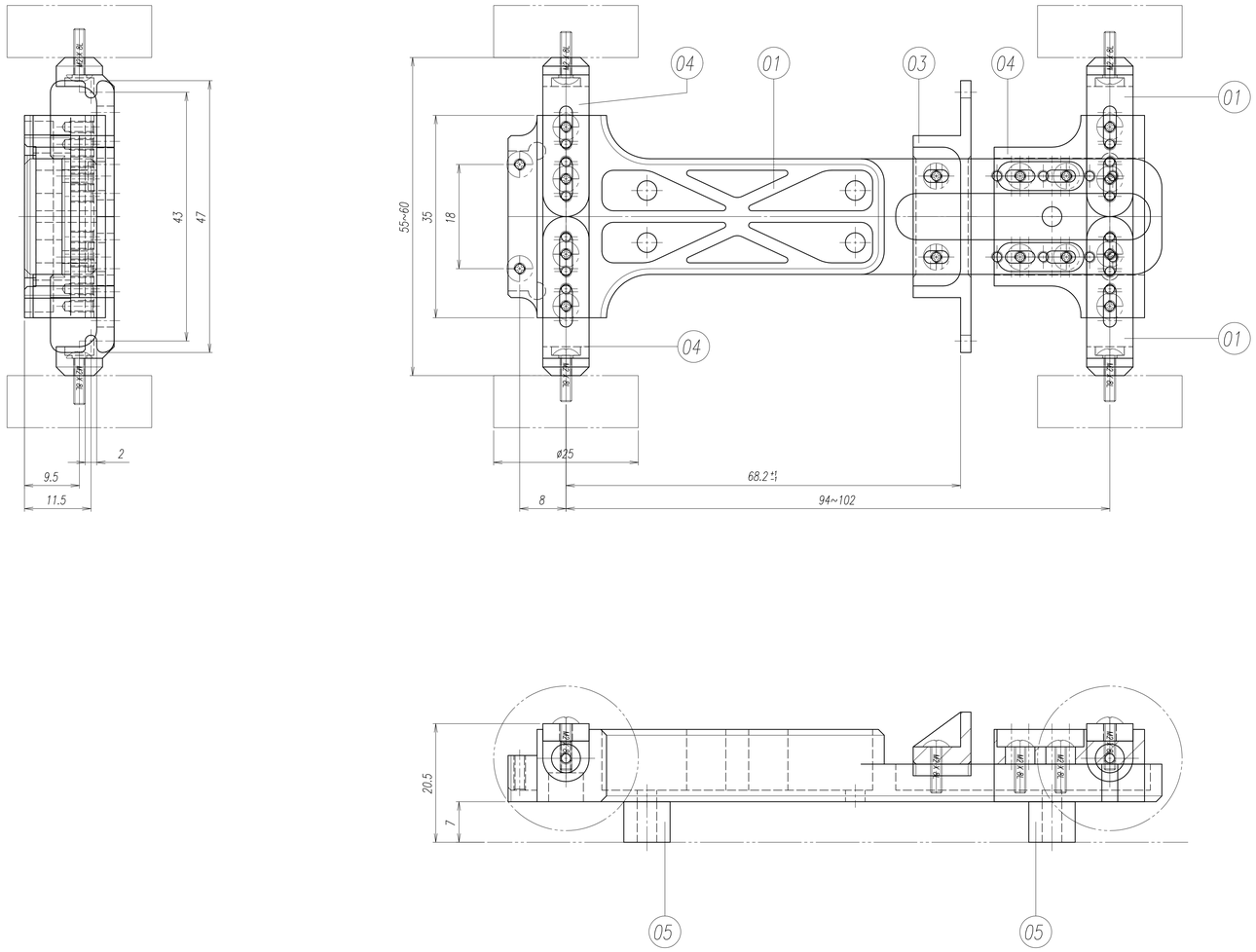

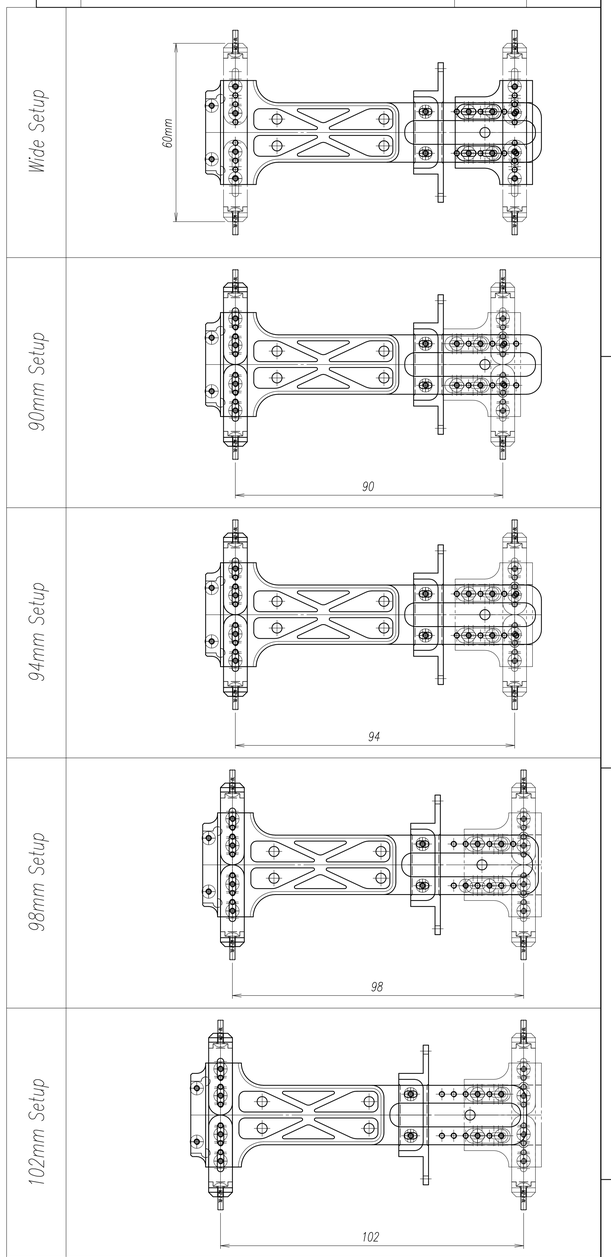

Number	Part Name	Drawing Number	Material	Finish	Quantity
06	Screw	Trust_M2X8L	–	- -	20
05	Post	F01-0005-01	AL6061	Sanding Glass Black Anodizing	3
04	Wheel Hub	F01-0001-01	AL6061	Sanding Glass Black Anodizing	4
03	Body Mount	F01-0004-01	AL6061	Sanding Glass Black Anodizing	1
02	Rear Wheel Mount	F01-0003-01	AL6061	Sanding Glass Black Anodizing	1
01	Main Body	F01-0002-01	AL6061	Sanding Glass Black Anodizing	1

Number	Part Name	Drawing Number	Material	Finish	Quantity
01	Mini-Z Dummy Frame	F01-1001-01	–	- -	1

Dimesion	Tolerance
0.5~30	±0.05
30~120	±0.1
120~315	±0.15
315~1000	±0.2
1000~2000	±0.5
2000~3000	±1.0

Project Name	Mini-Z Dummy Frame				Projection
Project Number	F01-1000-01				
Design	Check	Approved	Unit	Scale	Sheet
JWKim			MM / inch	2:1	A1

JD.Co.,LTD.
e-mail: jong2755@gmail.com
phone: +82-10-4841-3755